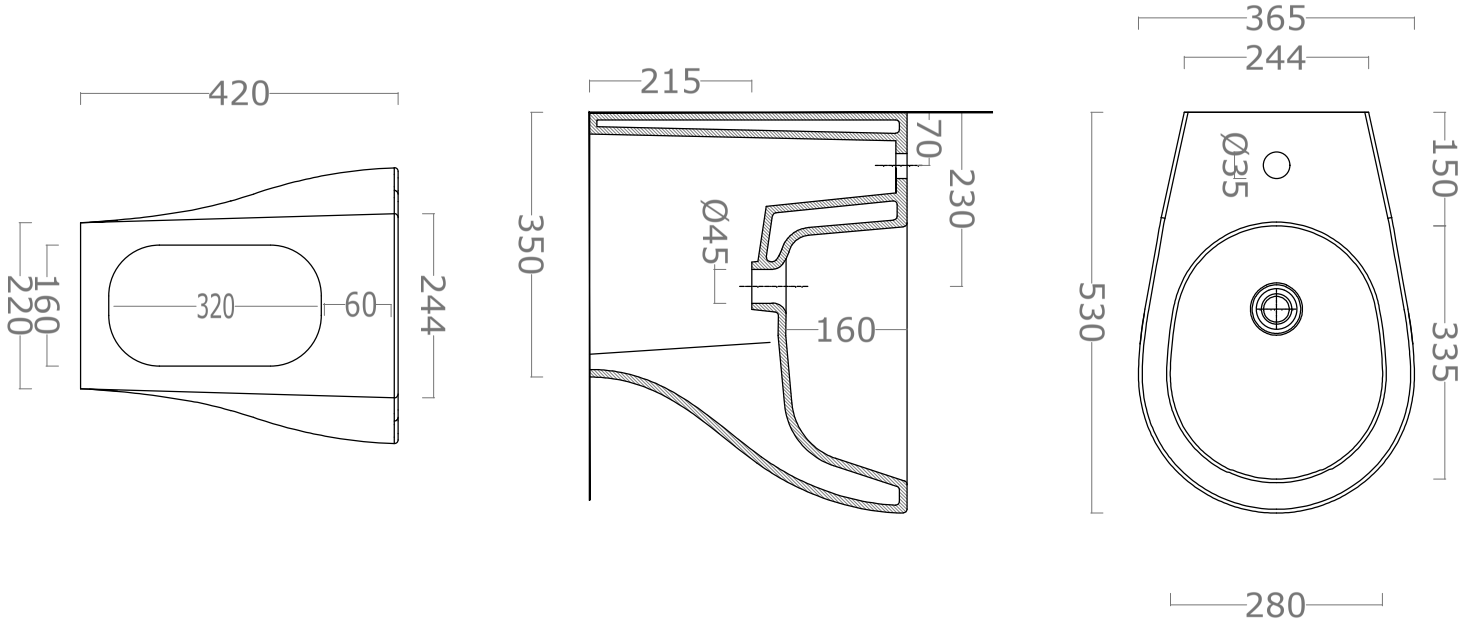

ALFA CERAMICA

Bidet back to wall Fly
Art. 0590